VWP3722W8A0,1,5,7,8
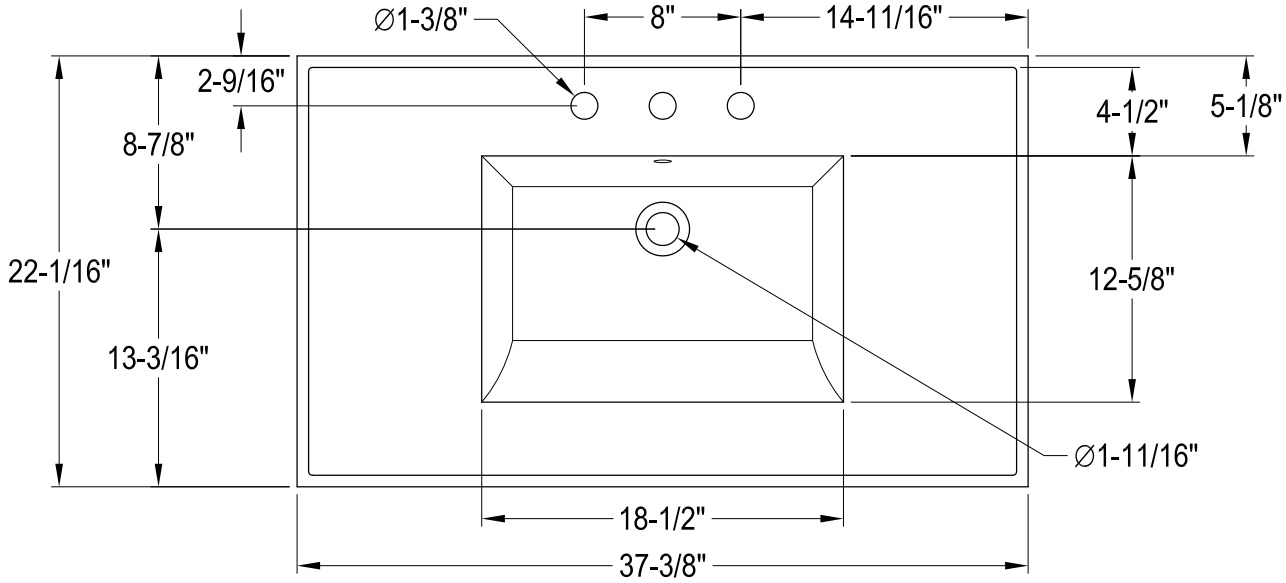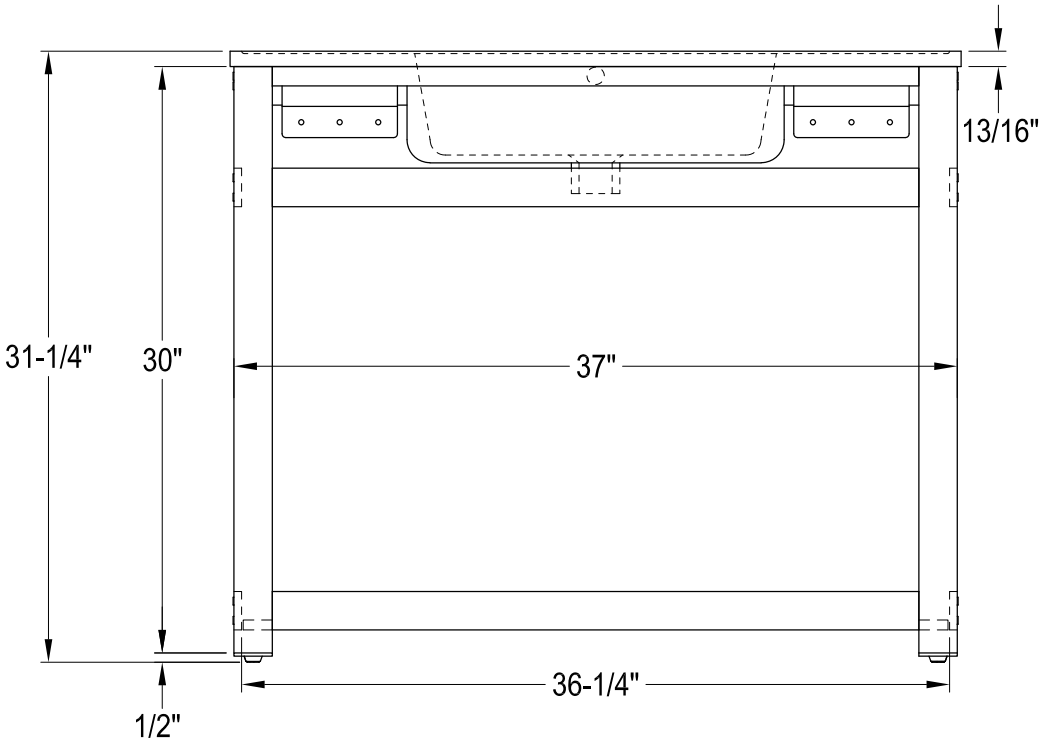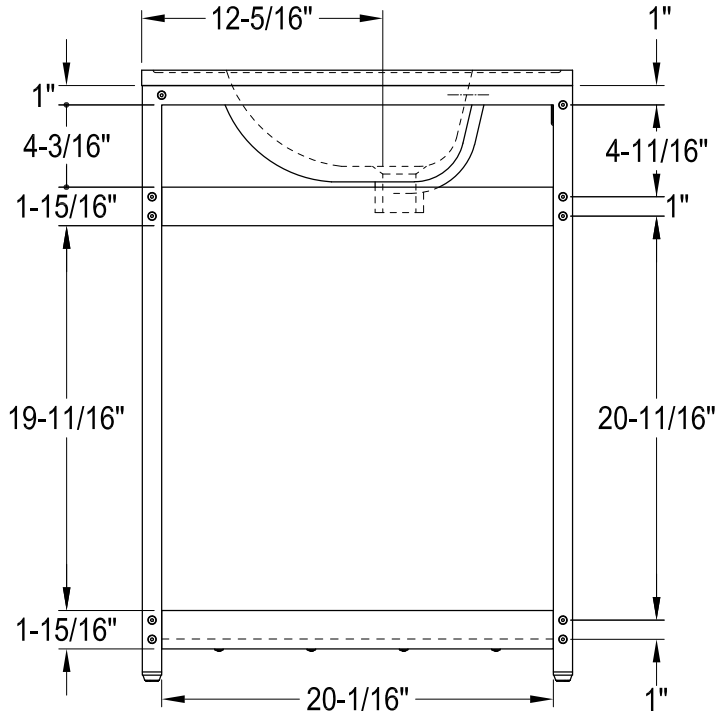
37" Ceramic Console Sink